CORRELATION OF MAP UNITS

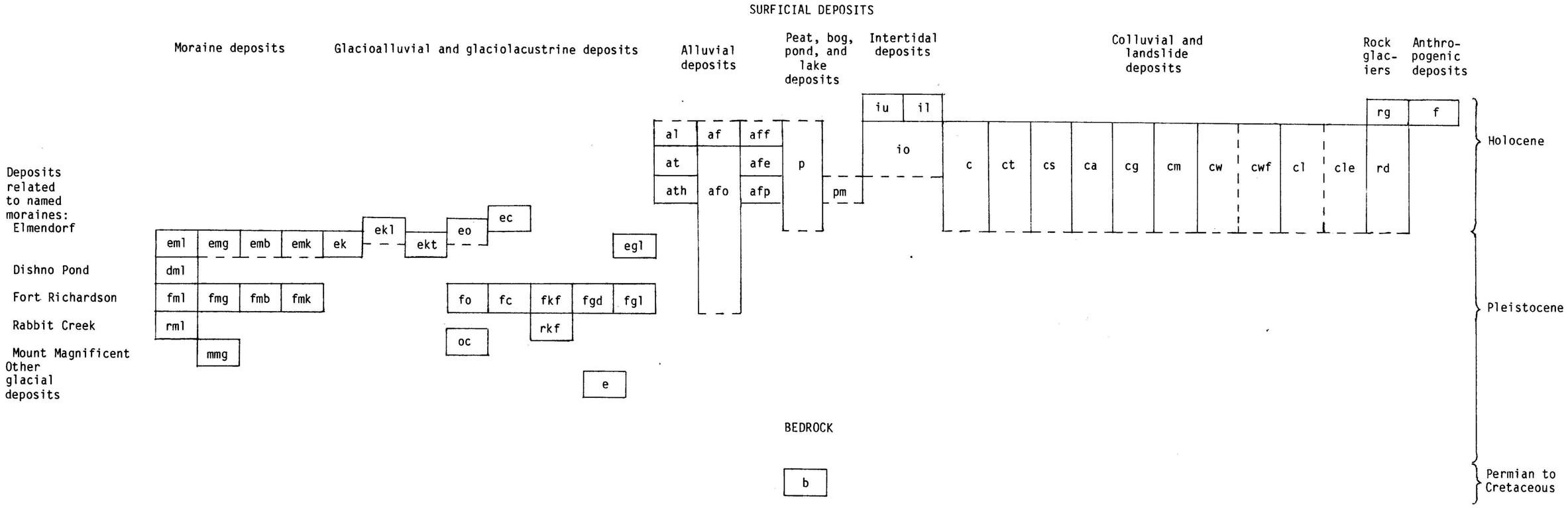

EXPLANATION

[Description of map units is given in text]

MORAINE DEPOSITS

Lateral-moraine deposits

- eml — Deposits of the Elmendorf Moraine (late Pleistocene)
- dml — Deposits of the Dishno Pond moraines (Pleistocene)
- fml — Deposits of the Fort Richardson moraines (Pleistocene)
- rml — Deposits of the Rabbit Creek moraines (Pleistocene)

Ground-moraine deposits

- emg — Deposits of the Elmendorf Moraine (late Pleistocene)
- fmg — Deposits of the Fort Richardson moraines (Pleistocene)
- mmg — Deposits of the Mount Magnificent ground moraine (Pleistocene)

Ground moraine that may thinly cover bedrock

- emb — Deposits of the Elmendorf Moraine (late Pleistocene)
- fmb — Deposits of the Fort Richardson moraines (Pleistocene)

Ground-moraine and kame deposits

- emk — Deposits of the Elmendorf Moraine (late Pleistocene)
- fmk — Deposits of the Fort Richardson moraines (Pleistocene)

GLACIOALLUVIAL AND GLACIOLACUSTRINE DEPOSITS

Kame deposits of the Elmendorf Moraine (late Pleistocene)

- ek — Deposits in kames of high to moderate relief
- ekl — Deposits in kames of low relief
- ekt — Kame-terrace deposits of the Elmendorf Moraine (late Pleistocene)

Outwash-plain and terrace deposits

- eo — Deposits of the Elmendorf Moraine (late Pleistocene)
- fo — Deposits of the Fort Richardson moraines (Pleistocene)

Meltwater-channel deposits

- ec — Deposits of the Elmendorf Moraine (late Pleistocene)
- fc — Deposits of the Fort Richardson moraines (Pleistocene)
- oc — Older deposits

Kame-fan deposits

- fkf — Deposits related to the Fort Richardson moraines (Pleistocene)
- rkf — Deposits related to the Rabbit Creek moraines (Pleistocene)
- fgd — Glacial-lake delta deposits related to the Fort Richardson moraines (Pleistocene)

Glacial-lake deposits

- egl — Deposits related to the Elmendorf Moraine (late Pleistocene)
- fgl — Deposits related to the Fort Richardson moraines (Pleistocene)
- e — Eklutna deposits

ALLUVIAL DEPOSITS

- al — Alluvial deposits along modern streams and in lowest terraces (late Holocene)
- at — Alluvial deposits in terraces
- ath — Alluvial deposits in high terraces (early Holocene)

Alluvial-fan deposits

- af — Coarse-grained deposits
- aff — Fine-grained deposits
- afo — Older alluvial-fan deposits
- afe — Principal alluvial-fan deposit at mouth of Eklutna River
- afp — Principal alluvial-fan deposits along Peters Creek

PEAT, BOG, POND, AND LAKE DEPOSITS (HOLOCENE AND PLEISTOCENE)

- p — Peat, bog, and pond deposits
- pm — Lake and deltaic deposits of a formerly more extensive Mirror Lake

INTERTIDAL DEPOSITS (HOLOCENE)

- il — Modern lower intertidal deposits
- iu — Modern upper intertidal deposits
- io — Older intertidal deposits

COLLUVIAL (INCLUDING LANDSLIDE) DEPOSITS (HOLOCENE AND PLEISTOCENE)

- c — Colluvial deposits on mountain slopes, undivided
- ct — Talus deposits
- cs — Solifluction deposits
- ca — Mixed colluvial and alluvial deposits
- cg — Mixed colluvial and glacial deposits
- cm — Colluvial deposits derived from moraines or other glacial deposits
- cw — Colluvial deposits on walls of sea and stream bluffs
- cwf — Fine-grained colluvial deposits on bluff walls
- cl — Landslide deposits, undifferentiated
- cle — Landslide deposits in earthflows

ROCK GLACIERS AND THEIR DEPOSITS (HOLOCENE)

- rg — Active rock glaciers
- rd — Rock-glacier deposits

ANTHROPOGENIC DEPOSITS (HOLOCENE)

- f — Engineered fill and areas extensively reworked by earthmoving equipment

BEDROCK (PERMIAN TO CRETACEOUS)

- b — Undifferentiated

OTHER SYMBOLS

Contact--Approximate, inferred, or indefinite

Channel--Abandoned glacial meltwater channel cut into bedrock or other geologic material and not mapped separately

Escarpment--Indicates selected relatively prominent differences in level between adjacent channel deposits; ticks on side of lower channel

Sackung trench--Approximate alignment; only principal trenches shown

This report is preliminary and has not been reviewed for conformity with U.S. Geological Survey editorial standards and stratigraphic nomenclature.