Open File Report No. 80-5

APPLICATION OF PORTABLE DELAYED NEUTRON ACTIVATION ANALYSIS EQUIPMENT IN THE EVALUATION OF GOLD DEPOSITS

by

J.M. Sims

1980

Final Report

APPLICATION OF PORTABLE DELAYED NEUTRON ACTIVATION ANALYSIS EQUIPMENT IN THE EVALUATION OF GOLD DEPOSITS

Submitted to

Mining and Mineral Resources Research Institute
Office of Surface Mining
U.S. Department of Interior
Washington, D.C. 70740

Grant No. G5184001

March 1980

By

John F.M. Sims

Mineral Engineering
Mineral Industry Research Laboratory
School of Mineral Industry
University of Alaska
Fairbanks, Alaska 99701

TABLE OF CONTENTS

	Page
Introduction	91
Development of the Gold Analyser	93
Basic Principles of the System	94
The Instrument Package	95
Hand Held Probe	95
Electronic Pack	98
Control Module	99
Liquid Nitrogen Supply	99
Operational Safety	100
Review of Operating Results	100
Sampling Practice	105
Broader Applications	106
Conclusions and Recommendations	111
Costs	112
Acknowledgements	113
APPENDIXES 1 and 2	114
References and Information Sources	115

FIGURES

Page

Figure 1 - A Typical Spectrum 96

Figure 2 - Portable Analyser Probe 97

Figure 3 - Sketches Illustrating Possible Effects of Gold Distribution Characteristics upon Fluorescence and Chip Sample Assays 101

Figure 4 - Comparison of X-ray Fluorescence and Chip Sampling Results for the Laboratory Mockup at Leslie Gold Mine 103

Figure 5 - A Comparison of the Averages of Various Suites of X-ray Fluorescence Results and Corresponding Chip Sample Assays Obtained during Test Work on Various Prototype Models 104

Figure 6 - Length of Face to be Scanned at Marievale Gold Mine using Prototype 1 Needed to Achieve a Given Precision in the Given Time 107

Figure 7 - Length of Face to be Scanned at Blyvooruitzicht using Prototype 2 Needed to Achieve Desired Precision in the Given Time 108

TABLES

Table 1 - A Comparison of Effective Sample Volumes for Various Hole Sizes 110

Table 2 - A Comparison of Effective Sample Volumes in 'B' and 'N' Size Diamond Drill Holes 111

Introduction

Evaluation of gold deposits is based firmly on entrenched practices involving channel sampling and fire assay in the case of hard rock associations and physically recovered metal from known, usually measured, sample volumes in the case of unconsolidated placers. Both methodologies whilst simple and relatively straightforward are expensive, labor intensive and, in some instances, subject to time delays, which can be costly as well as inconvenient, between the taking of samples and the receipt of assay results.

Relatively new analytical methods have been developed in recent years and, spurred on by the high level of interest in precious metal exploration, are finding application in prospecting for and the evaluation of gold deposits.

The most important single factor influencing analytical methods and sampling procedure is recognition of the fact that gold in its natural associations displays extremely erratic distribution in host lithologies whether they are hard rock or placer. In view of this characteristic of inhomogeneous distribution, quantitative assessments of the gold content of an auriferous unit must be undertaken on relatively large samples. Fire assay is an analytical procedure which lends itself to the determination of precious metal contents in relatively large and therefore more probably representative samples of the mineralized body. Whilst most of the new analytical techniques possess very accurate capabilities in terms of detection limits they are performed, and can only be performed cost effectively, on small samples the results of which frequently display poor reproducitility, since the samples themselves are not representative.

Although it may seem contradictory the new analytical methods with their great sensitivity on small volumes of sample material have their greatest application in regional surveys and target definition studies where reliable qualitative and semi-quantitative data focusses attention on zones of possible economic interest. These methods are not suitable for ore evaluation purposes since determinations are performed on inadequate sample volumes.

Gold exploration and evaluation work is concerned with two heirarchies of analytical input:

1) Regional geochemical methods capable of broadly defining, in a qualitative or semi-quantitative sense, zones for more detailed investigation.
2) Detailed sample analysis which provides meaningful data for reserve evaluation purposes.

Some of the analytical procedures used in reconnaissance and regional studies utilise atomic absorbtion methods and the more accurate irradiated neutron activation analysis of fire assay

cupellation beads or ashed biogenetic samples. Determination of gold values from soil or geobotanical samples would be greatly enhanced, in terms of understanding aspects of mineral deposit genesis, if pathfinder elements such as copper, arsenic, mercury and tellurium were also analyzed.

High confidence evaluation data can only be generated by a method which combines a sound level of accuracy in determining precious metal contents from relatively large sample volumes. Traditionally the fire assay method has satisfied the objective admirably in hard rock exploration and mining but it is both slow and expensive. The same comment applies to placer evaluation methods which have changed very little through the years. Given the intense interest in precious metal exploration and mining there is an assured commercial future for any analytical system which could replace the entrenched practices of valuation without sacrificing accuracy and reliability, and at the same time producing cheaper and more rapid results. The (portable x-ray fluorescence) gold analyser described and reviewed in this report promises to achieve this highly significant technological breakthrough.

The attributes of a gold analysis system which could act as a panacea for the needs of the explorationist and the miner alike would include:

i) The capability of being used as a qualitative as well as a quantitative tool yielding accurate results in respect of large samples.
ii) The capability of generating results on site either in the field or within a prospect or mine.
iii) An identifiable cost effectiveness in relation to other methods.
iv) The capability of being housed in an equipment package which combines ruggedness, portability and reliability with operational options which permit measurements to be made on outcrops, mine faces, borehole cores as well as direct in-situ down-the-hole determinations.

The portable x-ray fluorescence gold analyser is on the threshold of meeting all the criteria cited above. Since the system is non-destructive in so far as the sample is concerned check assays employing conventional techniques can be run on a small percentage of the sample population.

This report by its very nature is a state of the art review which sets out to describe the current instrument package, the principles by which it functions, its performance compared with detailed chip channel sampling and then suggests how the system may evolve in terms of its application to the investigation of hard-rock and placer deposits.

Development of the Gold Analyser

In 1973 the Chamber of Mines of South Africa Research Organization started to colaborate with EG and G ORTEC, an American Company speeializing in electronic systems, in the development of a portable gold analyser. The role of the Chamber of Mines was to develop specifications for the instrument package and also to undertake very careful test programs to evaluate the performance of successive prototype systems. EG and G ORTEC for its part undertook to assemble the instrumentation to meet specifications set down by the Chamber of Mines. A formal agreement between the parties embodying the concept outlined above was reached in 1975. This came in the wake of a test program utilising laboratory mock-up equipment in an underground mining setting from the results of which it was concluded that the x-ray fluorescence method stood a good chance of success in providing a viable alternative to established sampling and analytical techniques in South African Mines. The present analyser system satisfies many of the specifications stipulated by the Chamber of Mines but appears to require further development before it can meet certain criteria for broader application.

In terms of the agreement between the two parties the South African Chamber of Mines established project goals and specifications to EG and G ORTEC who furnished the design and instrumentation know-how. The specifications called for the following:

i) An ability to detect and measure gold in-situ in Witwatersrand conglomerate orebodies in a concentration of 20 ppm (20^{106}) or less.
ii) The instrument to be lightweight and maneuverable in restricted spaces.
iii) The instrument must function effectively and efficiently within a temperature range of 20°C to 50°C.
iv) The instrument had to be able to operate under humid even wet conditions.
v) The instrument must be able to withstand rough handling and severe wear and tear from abrasive rock materials.
vi) The instrument package must have the capacity to function and record data throughout the duration of a seven hour working shift without coolant or power source replenishment.
vii) The instrument must incorporate a fully effective and safe liquid nitrogen containment system.
viii) Operation of the instrument must be safe for the sampler and other persons in operational proximity.
ix) The system was required to meet fireproofing standards established by the Inspector of Mines.
x) Ease of operation was the last but certainly not least important requirement.

The first prototype instrument was built embodying the principles which had been validated in the early pilot test work. This instrument was tested and evaluated following which some modifications were made in the light of revisions in the specifications. A second prototype instrument package was built embodying these modifications and a further prolonged period of testing and evaluation followed. This provided the basis for final specification revisions leading to the production of the current instrument which the developers claim is a reliable, robust and practical sampling and assaying tool which, subject to market demand, could be produced commercially.

Basic Principles of the System

Gold when bombarded with gamma rays (photons) of sufficiently high energy will absorb the photons in turn disturbing or exciting the electrons round the gold atoms. The excited electrons will then return to their undisturbed state but, in so doing, themselves emit a stream of secondary fluorescent photons possessing the energy level or signature characteristic of gold. The physical basis of the system is thus simply stated and the gold concentration within the rock is determined by monitoring and measuring the emission signal generated by the disturbed or excited gold particles.

Gold in the rock or sample is bombarded by photons emitted from a Cadmium^{109} radioactive source having an energy level 88 Ke V ($10\underline{4} \times 10^{-16}$ J) and an emission rate is about 4×10^{9} photons per second. The photon stream emerges from the Cd^{109} source in the shape of a diverging cone. The geometry of the cone is such that 5 cms from the source the diameter is approximately 10 cms. There is therefore a rapid dispersion characteristic inherent in the geometry of the photon beam. Photons within the cone will penetrate approximately 10 cms into the rock against which the probe housing the source is held and any gold particles bombarded in this way will respond by emitting fluorescent photons. The position of gold particles within the rock influences the response; thus gold which is several centimeters beneath the surface will receive fewer 88 KeV charged photons than gold near to the source (close to the surface). Besides receiving fewer photons such gold particles will emit a fluorescent photon stream which is weaker and has less chance of escaping from the rock and being monitored by the receiver. Because of the penetration and response limitation the average depth from which gold signals its presence is 2.5 cms (1 inch).

Not all of the fluorescent photons emitted by the gold in the rock are received and some scattering takes place. A true measure of gold concentration present in the rock is not obtained simply by counting the photons being received rather it is a function of monitoring an energy spectrum of photons and then sorting them into

different energy groupings. (Figure 1 illustrates a typical energy spectrum with photon peaks which can be attributed to gold relative to background). An estimation of the number of fluorescent photons due to gold is obtained by:

i) Counting all photons having an energy level of 77 keV to 81 keV.
ii) Estimating the photon background level i.e. the number of photons found in the 78 keV to 80 keV region if no gold were present.
iii) The number of fluorescent gold photons and therefore the measure of gold content is arrived at by subtraction. In order to arrive at a sound estimation of the actual number of fluorescent photons attributable to gold a large number must be counted in the 78 kev to 80 kev energy range. Two significant restrictive features of the method emerge:

   a) Scanning should be undertaken over a definite time span in order to obtain reliable estimates of background.
   b) Results of the measurement are in part determined by the statistics of counting random events (Poisson distribution). Negative results may be possible in the absence of bias.

The Instrument Package

The system comprises four items of apparatus each of which will be described in detail. The four components are:

i) Hand-held probe.
ii) Electronic pack.
iii) Control Module.
iv) Liquid Nitrogen Supply.

The portable unit is composed of the hand held probe and the electronic pack.

Hand Held Probe

The probe assembly is incorporated into a compact hand held instrument which weighs 1.3 kg (2.9 lbs) when charged with liquid nitrogen coolant (Figure 2). It houses the 109 Cd radioisotope source with collimator and shutter, a hyperpure germanium detector, liquid nitrogen vacuum cryostat, high voltage power supply, a light-bar sample distance monitoring system, display windows and a multifunction trigger system.

The 109 Cd radioactive source is housed within a tungsten collimator which has a molybdenum window to filter 22 ke V x-rays. The source is located centrally within the detector system in the

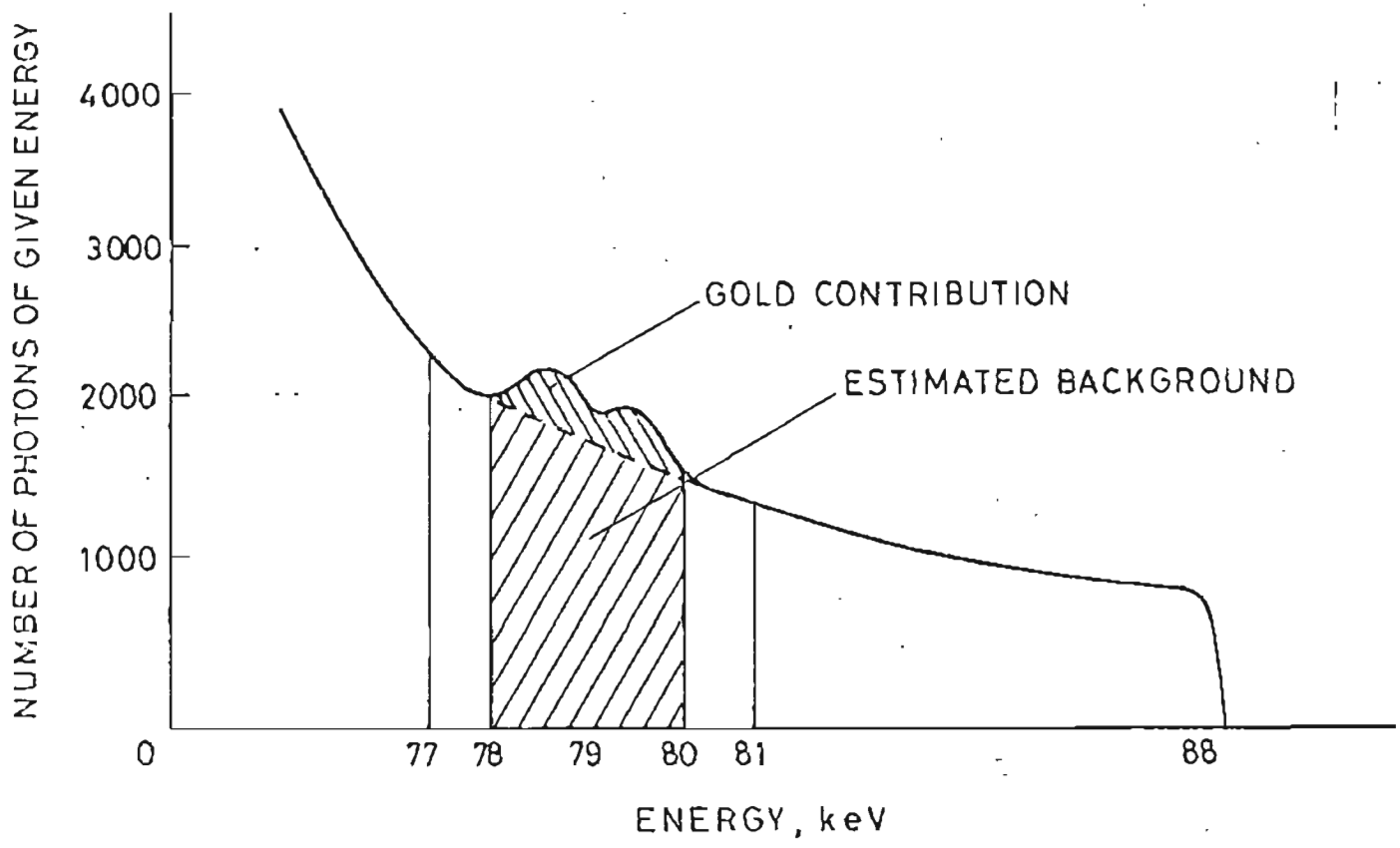

Figure 1 - A Typical Spectrum

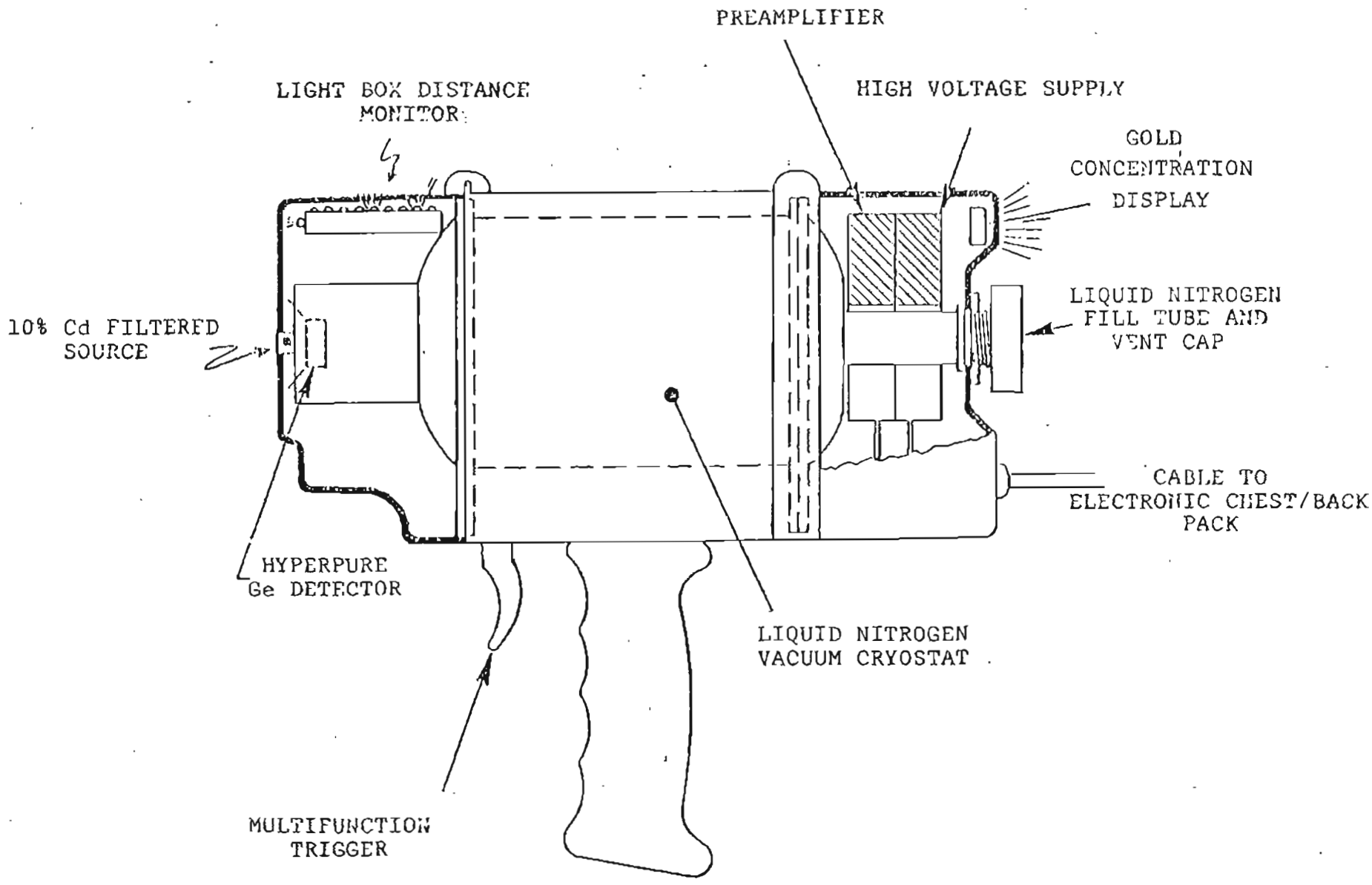

Figure 2 - Portable Analyzer Probe

end-cap housing. When activated by the trigger a tungsten shutter moves away from the source allowing a cone of gamma rays to radiate from the source. The cooled hyperpure germanium detector is used to obtain high resolution characteristics in receiving the emitted photons. The use of a liquid nitrogen cooled solid state hyperpure germanium collector permits repeated usage of the instrument over a wide heat range without detector harm. Ruggedness of construction is aided by using ion implantation techniques for assembling the detector.

The trigger which activates the shutter mechanism also performs other key functions. Since the instrument is designed for operation underground, a light, built into the front of the probe, illuminates the rock surface when a measurement is being taken and is activated by the trigger. The trigger also controls digital LED read-out functions and an illuminated sample distance monitoring system. The latter consists of a box with nine small lights mounted on the long axis of the probe at the front of the instrument. Its function is to indicate whether the probe is being held too close or too far from the rock face when measurements are being made. When held at the correct (optimum) distance which is about 5 cms from the face the center light in the bar is lit. When the scanning probe is too close to the rock surface a light nearer to the front end of the bar is illuminated informing the operator of the situation. If the end light on the bar flashes this informs the operator that he is too close and the measurement will be stopped automatically. The measurement will automatically restart once the probe is moved back into the operational range.

The digital LED readout shows various displays when the instrument is in use. During the course of taking a measurement the display will record percentage of sample time elapsed in the range 0-99. On completion of the measurement scanning period, which is a pre-set time, the display shows the result in calibrated units (grammes per tonne). If the trigger is then released and depressed anew the display shows how many results have been recorded and automatically commits the last result to memory (the instrument has a storage capacity of 256 results). Release of the trigger yet again readies the probe for the next measurement.

An important feature of the probe is the liquid nitrogen cryostat which has a reservoir capacity of 150 ml sufficient for seven hours of operation. The spill proof design of the cryostat combines essential attributes of strength with lightness of weight.

Electronic Pack

The electronic pack is carried by means of a harness either on the back or front of the operator. The total weight of the pack is about 6.5 kgs (15 lbs). A flexible cable attaches from the pack to

the hand probe. Under normal operating conditions the unit is sealed but a variety of controls and switches are accessible under cover. In the event of a fault developing within the system electronic card-mounted components can be readily replaced. Power is supplied by a set of nickel cadmium battery cells which have an operational life of approximately twelve hours. The system is automatically shut off when battery output is too weak for operation however memory systems continue to hold retrievable data for several days following power failure.

The chest pack houses a variety of electronic components including analog pulse processing circuits, digital ratemeter, pulse height analysers, digital data processing circuits and memory banks.

Control Module

At the end of the sampling shift during which assay scans have been made of a number of samples the electronic pack is connected up to a control module and the stored results are printed out. The roll print is in a readily usable form and can be annotated with information from the operator's notes.

Another function of the control module is to recharge the nickel-cadmium battery cells in the chest pack. A keyboard control pannel is used to program the system and when necessary to reset the electronics housed in the pack.

The control module is not designed as a portable unit but is meant to be housed in a base facility. One control module has the capability of servicing up to four portable systems (probes and chest packs).

Liquid Nitrogen Supply

The liquid nitrogen coolant slowly boils away during the operational period of a sampling shift. The design of the instrument insures that sufficient liquid nitrogen is carried in the probe to serve the instrument for one shift. This means that liquid nitrogen must be replenished frequently, a factor which is provided for by having a tank containing about a weeks supply of liquid nitrogen available on site. Refilling is effected by connecting the probe to the portable supply system (a task which is conveniently undertaken whilst the batteries are being recharged).

Liquid nitrogen can be an extremely hazardous substance and every precaution must be observed to prevent mishaps.

Operational Safety

The instrument package has passed stringent tests and has been granted clearance for use in fiery mines (mines in which methane could constitute a hazzard) by the South African Government Mining Engineer. Operator hazzard from the radioisotope source is minimal. The tungsten shutter mechanism provides a total shield when the instrument is not in use. When the trigger is activated potentially dangerous rays are emitted and a dangerous radiation dose could be received by anyone less than 10 cms in front of the source window. Since the operator is behind the source no direct radiation will be received. Radiation backscatter from the rock is minimal and the operator would need to work 3000 hours on sampling work to sustain more than the permitted radiation dose.

Very careful test procedures must have been undertaken to validate these claims and overcome concerns regarding the safe operation of the system.

Review of Operating Results

The instrument has to be calibrated before it can provide direct analytical readings in terms of convenient units such as grammes per ton. Calibration is best performed using homogeneous samples of known concentration which have been prepared as standards. During the South African test program the Chamber of Mines Research Facility undertook calibration of the instruments with some check calibration undertaken independently by one of the major Mining Companies. Calibrated instruments were found to remain relatively stable for several weeks and there is a strong suggestion that shifts in calibration serve as a warning of imminent instrument failure.

Calibration against heterogeneous samples is difficult; however some test work was done on fabricated blocks in which gold-rich layers were sandwiched between barren ones. These blocks were then scanned end-on simulating the way gold tends to occur in Witwatersrand narrow ore beds. It was observed that providing the thin band of high grade was within 4 cms of the centre of the emission beam the error in measurement was less than 18%.

It is impossible to obtain a one to one correspondence between values obtained from chip sampling and fluorescent scanning (Figure 3) because of the distribution characteristics of gold and the fact that the 'sample' in each instance has different dimensions.

In comparing chip sample assays and corresponding fluorescence values it is necessary to perform a statistical analysis. This procedure has been adopted with some adaptations for each of the prototype systems tested to date. The results are discussed below.

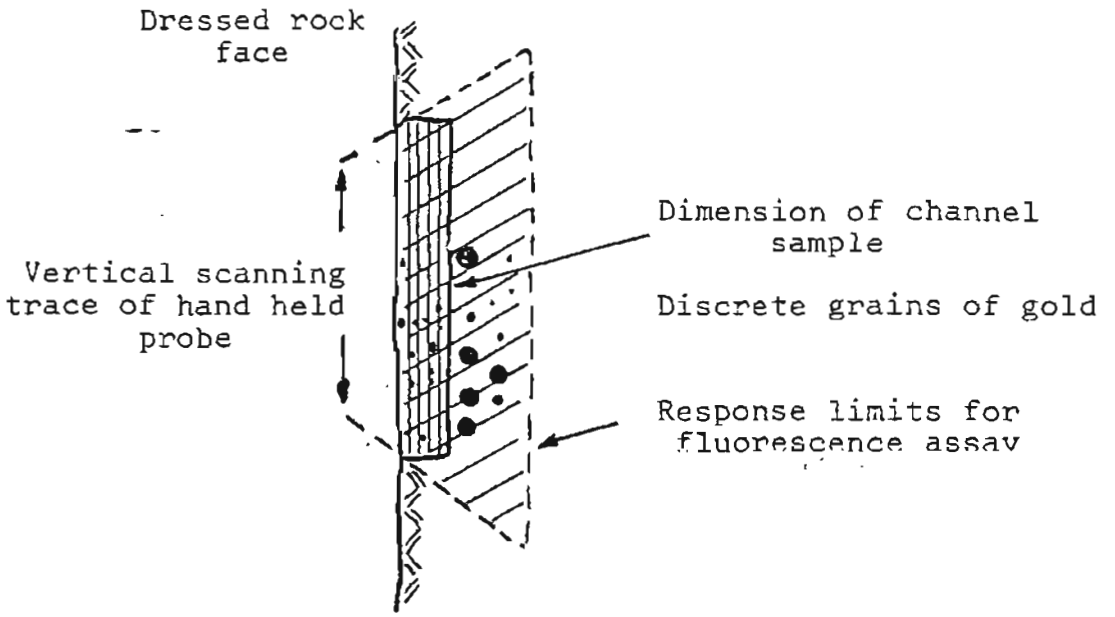

a) Fluorescence assay would be significantly higher than channel sample assay.

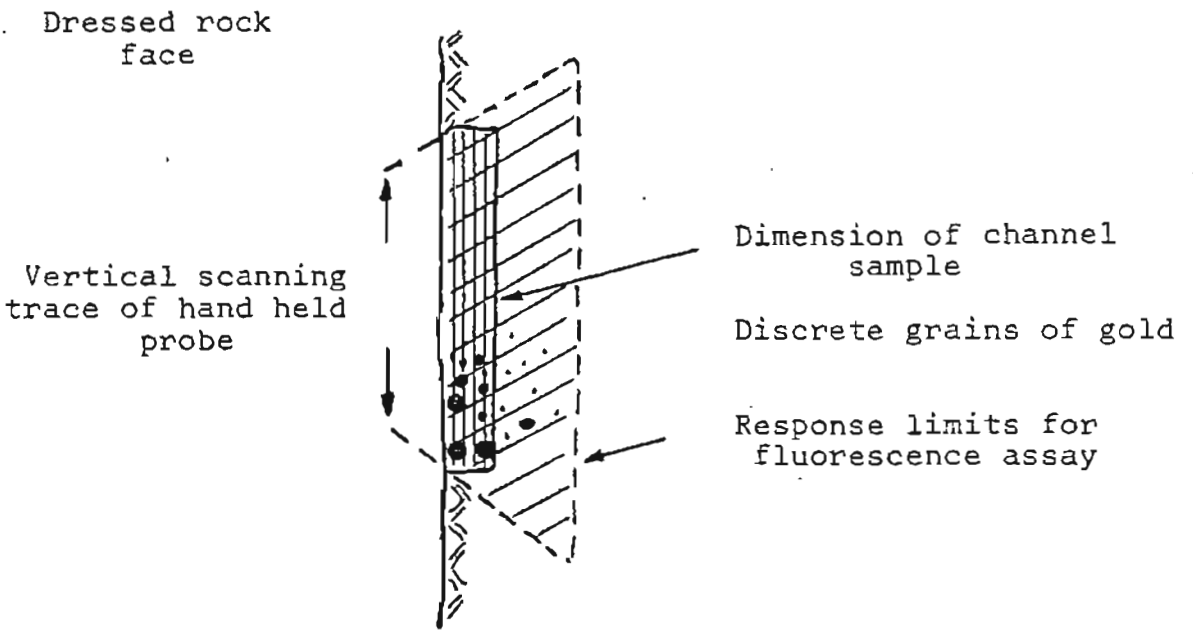

b) Channel sample assay would be significantly higher than fluorescence assay.

Figure 3 - Sketches Illustrating Possible Effects of Gold Distribution Characteristics upon in-situ Fluorescence and Channel Sample Assays.

i) Initial Laboratory Mock-up System.

The work was carried out on Leslie Gold Mine and involved scanning of a series of contiguous areas underground. The same sections were chip sampled and the resultant samples assayed by conventional means. Eight groups of samples were taken involving a total of 308 measurements (determinations). In Figure 4 the mean obtained for each of the eight groups by fluorescence and chip sampling/fire assay are compared. With one exception correlation is excellent.

ii) First Prototype Model.

A similar test program to that outlined above was made underground at Blyvooruitzicht Mine with the first prototype portable analyser. Six mine faces were investigated by scanning and subsequent chip sampling. The minimum number of samples for a given face was 14 and the maximum 31. The best fit for the data reveals a slight negative bias and the errors on the estimates of the means are larger for the fluorescence than for the corresponding chip samples. This was traced back to an inherent fault in the instrument and a known tendency to drift in performance during the course of a measurement shift.

Additional test work on the same property using another prototype model (second prototype) revealed similar traits which were also attributed to a faulty instrument. Results of subsequent tests are shown on Figure 5.

iii) Third Prototype Model.

This instrument was tested in a different manner. A 92 meter long exposure of the ore-body had been chip sampled contiguously prior to scanning. Each of the 23 four meter long sections exposed in the drive were scanned at a rate of 1m per 40 seconds. This test produced rather poor correlation attributed in part to the fact that the two techniques measured different samples since the chip sampling was done before the scanning. The instrument itself was used as a scanning tool and not held statically. Scanning introduces more 'noise' into the measurement when compared with stationary determinations.

The best fit to these sets of data indicates that chip sampling gave values about 10% higher than the fluorescent measurement.

Third prototype instruments were tested on various mines in which ore-body characteristics varied from narrow to wide reef. This test program showed correlations ranging from poor to excellent when compared to chip sampling. One identifiable problem relates to erratic gold distribution profiles in wide channel reefs. In such situations it has been shown that the instrument

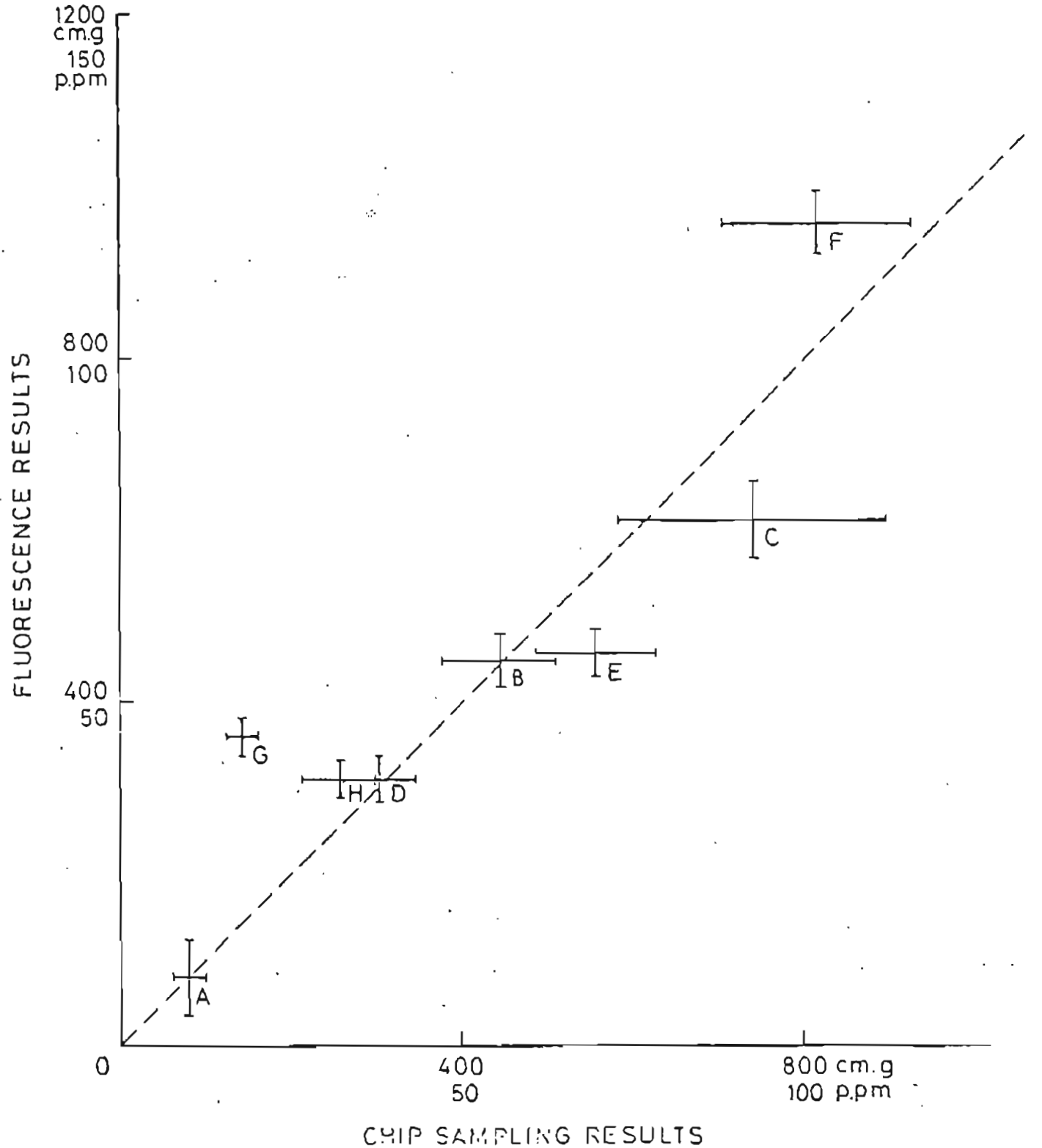

Figure 4 - Comparison of X-ray Fluorescence and Chip Sampling Results for the Laboratory Mockup at Leslie Gold Mine.

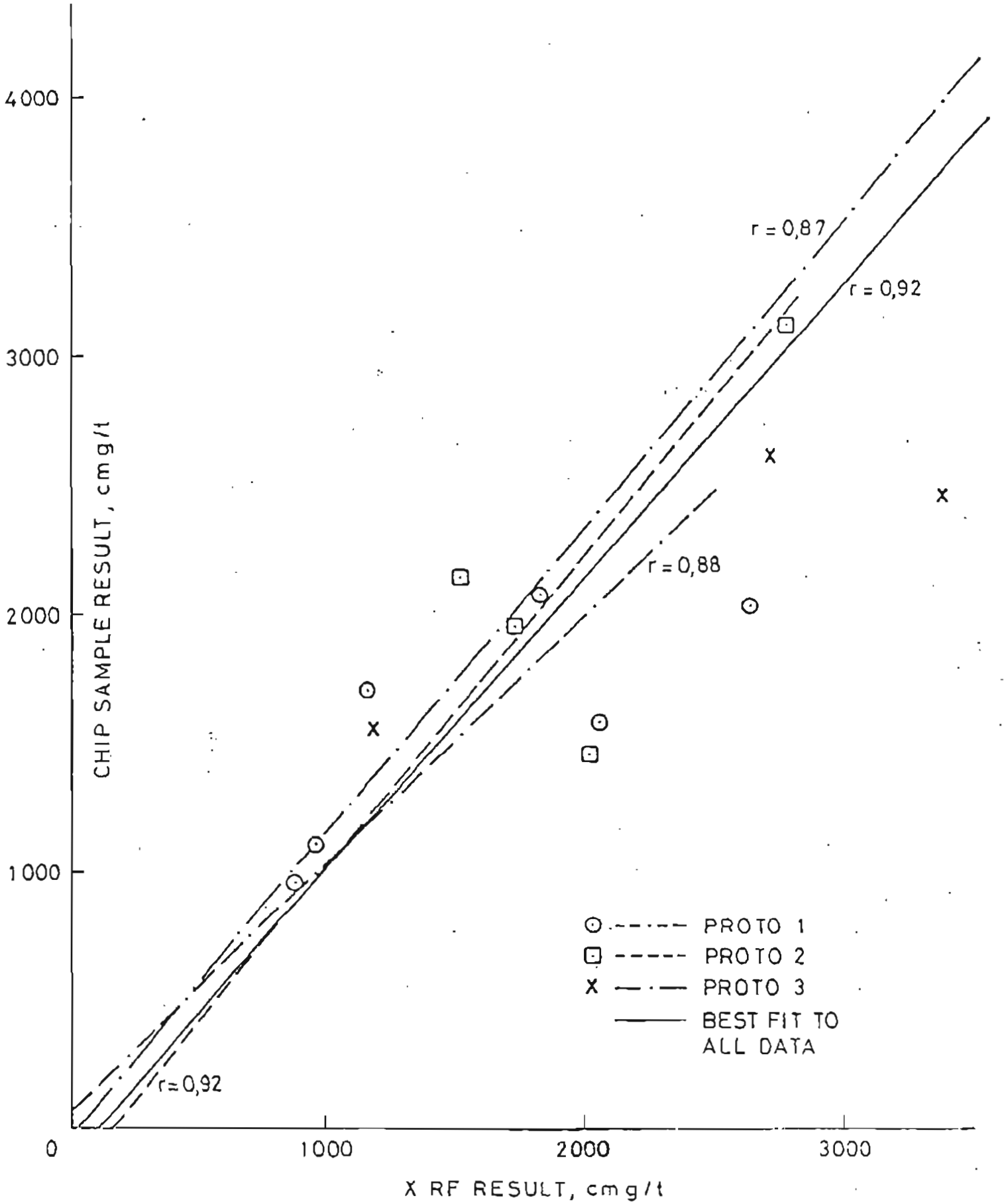

Figure 5 - A Comparison of the Averages of Various Suites of X-ray Fluorescence Results and Corresponding Chip Sample Assays Obtained During Test Work on Various

can locate gold values quite accurately and the technique will improve as detection limits of the system are further refined.

Protracted test work has been undertaken to investigate the following:

i) Reproducibility of measurement.
ii) Performance variation between different operators.
iii) Performance variation between different instruments.

A test program at Marievale Mine investigated reproducibility of measurements taken over the same 4.5m section of the ore-body at numerous times during the month long test period. This test was conducted with the first prototype model and involved twenty-eight separate scans. The results confirmed a normal distribution of values and produced a mean value of 211 cm g/t with a standard error of the mean of 28 cm g/t after instrument corrections. The principal contribution to the standard deviation was in the limited number of counts recorded in the 4.5m scanning span. Reasonable reproducibility was apparent.

In a similar experiment on Blyrooruitzicht using a second prototype model a 2.85 meter section was scanned 28 times using two operators each performing 14 scans. One operator obtained a mean value of 977 cm g/t with a standard deviation of 117 cm g/t whilst the other operator returned a mean of 900 cm g/t with a standard deviation of 117 cm g/t. In this test a major contributor to the standard deviation was in the statistics of counting, however, again the reproducibility was fairly good.

In yet another experiment on Vaal Reefs Mine a 28 meter length of face was scanned by one operator using two instruments. Each meter of the panel was scanned a different number of times on different occasions. Using one of the instruments for one scan per meter an average value of 424 cm g/t was obtained which reduced to 377 cm g/t for two scans per meter and 375 cm g/t for three scans. A second instrument yielded an average value of 431 cm g/t obtained from five scans per meter. Reasonable reproducibility and agreement between instruments is claimed in this test.

All the test results tend to support the conclusion that fluorescent techniques will prove to be viable for sampling not only Witwatersrand ore-bodies but other types of deposit as well.

Sampling Practice

The results of considerable test work outlined previously indicate that errors in the measurement method account for much of the perturbation seen in the data. Typically many of the errors in the measurement are relateable to counting statistics, geometric affects arising from variations in the distance between the probe and the face and the rate at which the face is scanned.

In a given situation the best method of measurement will be that in which the error of measurement is equal to the desired accuracy of estimating the value of gold in the mineralised body.

In the Witwatersrand where gold values are frequently confined almost exclusively to the base of a conglomerate unit and are contained within a band frequently less than one inch thick, spectacular concentrations of the metal occur. In such situations the limits of detection of the instrument can be fairly gross (for this reason the Chamber of Mines specifications of 15-20 ppm as the desired accuracy). This corresponds to an economic ore grade in virtually any other type of deposit. Clearly the detection limit specifications called for by the S.A. Chamber of Mines are too inprecise for many of the possible broader applications of this technology.

It has been stated that errors in measurement occur due to these influences namely: counting statistics, geometry of the face being probed and the way the instrument itself is panned and lastly the duration of the measurement period. By increasing the time for taking a static measurement or for scanning a measured thickness corresponding refinements in the resultant value will be obtained. In the test work done in South Africa the relationship between required precision, scanning rate and length of face which has to be scanned in order to achieve required accuracy have been studied. Figures 6 and 7 show plots of these parameters for test programs undertaken at Marievale Mine and Blyvooruitzicht. By comparing the results of these test studies it is clear that at Blyvooruitzicht it takes longer to evaluate a block of ground to the required precision (in both cases 50 cm g/t) than it does at Marievale. The underlying reason for this is to be found in differences in gold distribution at the two sites. Local variation in gold distribution will determine the time needed to sample a given block of ground or evaluate it within required limits.

Broader Applications

Although the system has been developed to provide reliable stope control and valuation data in South Africa Mines, a successful system of this type obviously has much wide application in gold prospecting and mining. It holds out promise of becoming an extremely useful addition to the technology applied to prospecting and mining evaluation.

In its present form as a portable hand held probe package it could be used for:

i) Qualitative and quantitative site investigations of placer prospect pits, trenches, river bars, etc.

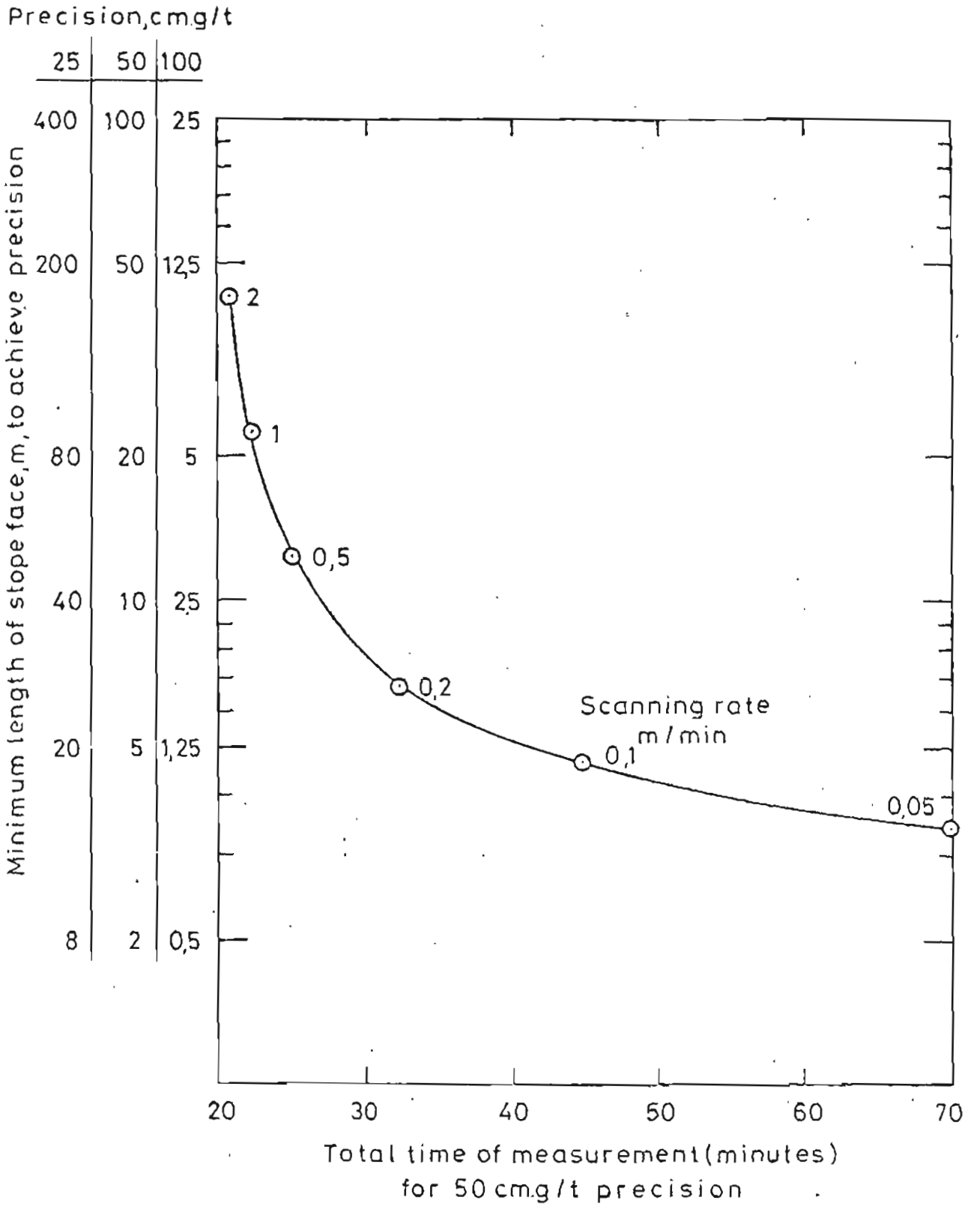

Figure 6 - Length of Face to be Scanned at Marievale Gold Mine, using Prototype 1 needed to Achieve a Given Precision in the Given Time.

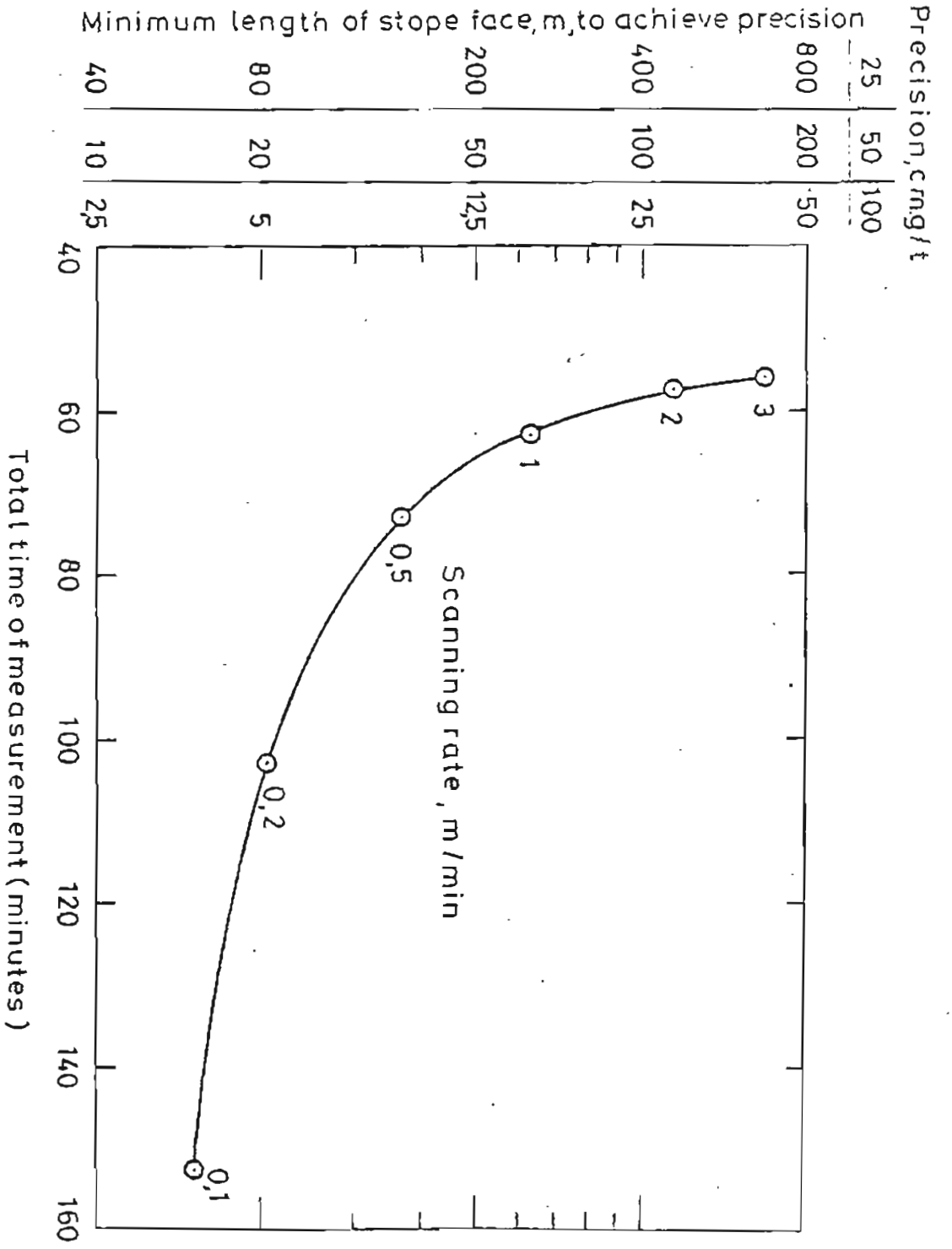

Figure 7 - Length of Face to be Scanned at Blyvooruitzicht using Prototype 2 Needed to Achieve Desired Precision in the Given Time.

iii) Rapid assaying of diamond drill cores or samples recovered by auger, churn or percussive methods.

iv) Testing recovery performance in placer systems by monitoring gold losses in tailings as well as rapidly, without recourse to clean-up, determining position of gold within a sluice box.

v) Testing accumulated gold tailings from abandoned hard rock mines for possible residual values which could be of economic significance.

THE GREATEST SINGLE ATTRIBUTE INHERENT IN THE SYSTEM IS ITS CAPABILITY OF SUPPLYING SOUND ON-SITE EVALUATION DATA.

A borehole probe to house neutron activation systems has been developed and tested by Princeton Gamma-Tech. Inc. under a research grant (J. Baicker et alia). The probe was only 2 inches in diameter giving it the capability of being used in diamond drill holes of 'B' size or larger.

The technology already exists to enable the system to be incorporated into a down-the-hole in-situ borehole analyser for gold. Such an application could have major implications in the investigation and evaluation of placer as well as shallow hard rock deposits.

The Metalog system developed by Scintrex (Canada) for in-situ down-the-hole fluorescent analysis of base metals utilises all elements of the probe system which would be necessary. The main departure from the hand-held instrument is that all components currently built into the hand-probe would need to be incorporated into a borehole probe unit the principal constraint being the dimensions of the instrument. The unit could be housed in a special rod for lowering into the borehole. Measurements would be made of the gold content contained in-situ in the wall of the borehole using an annular scanning device which ensures that the entire wall of the hole (360°) is scanned and sampled. If the instrumentation could be encapsulated in such a way that it could fit into narrow diameter diamond drill holes (say "BW" or larger) the potential for the instrument could be greatly improved upon. In large diameter holes such a probe could be eccentrically housed in a special rod.

One vital aspect of the use of the instrument for in-situ analysis is that it would effectively assay a relatively large sample. The sample volume obtained in churn hole drilling is relatively large thereby rendering the method reasonably sound for evaluating placers characterised by erratic and spotty precious metals distribution. In Table 1 the effective sample volume assayed by fluorescent in-situ analysis is compared with the sample volume obtained by conventional drilling. Two assumptions are made:

i) The mean penetration of the fluorescent signal into the side wall of the borehole is 5 cms (2.0").

ii) All material falling within the outside diameter of the hole is recovered through the casing as sample (in fact this ideal is very rarely attained) in the churn drill volumes.

TABLE 1 - A Comparison of Effective Sample Volumes in Various Hole Sizes

Sample volumes relate to 12" of borehole depth

Hole Characteristics	Sample volume (cubic inches) in churn drill hole	Sample volume (cubic inches) represented by fluorescent sample sleeve
9 1/2" outside diam. 8" casing	850.6	867.1
7 1/2" outside diam. 6" casing	530.1	716.3
6 1/2" outside diam. 5" casing	398.2	640.9
5 1/2" outside diam. 4" casing	285.1	565.4

In each example the sample volume tested by the fluorescence method is greater than the sample volume obtained from churn drilling assuming 100% recovery.

The in-situ method will excite micron sized gold particles and may detect their contribution to the overall value whereas the somewhat crude physical recovery methods based upon gravity separation will fail to detect much of the fine gold in deposits where it occurs in significant amount.

It should be apparent that the fluorescent method should have considerable application in detecting the presence of fine gold in certain deposits as well as monitoring the effectiveness of recovery systems in winning such gold.

The favorable ratio of sample size in fluorescent in-situ analysis compared with assays of split core samples, assuming the development of slim hole probes suitable for diamond drill holes, is even more impressive as Table 2 illustrates. In this case the core is split and one half is used for assay purposes the other half being retained for reference.

TABLE 2 - Comparison of Effective Sample Volumes in B and N Size Diamond Drill Holes.

Sample volumes relate to 12" of borehole depth

Hole Characteristics	Sample volume represented by split core	Sample volume represented by fluorescent sample sleeve
Core size		
- - - BX(W)	12.9	
B --		328.7
- - - BQ	9.7	
- - - NX(W)	21.9	
N --		375.5
- - - NQ	16.6	

Q designates wire line core sizes
X(W) designates conventional core sizes

O.D. of hole in both cases is the same.

Conclusions and Recommendations

The system as it exists at present is not capable of undertaking some of the functions which have been discussed in this report under the heading, Broader Applications. It is only a matter of time before the current limitations are resolved in terms of sensitivity and resultant improvements are incorporated into practical monitoring devices. As a prelude to justifiable acceptance of in-situ analysis as an alternative to traditional evaluation methods a substantial amount of research and development work needs to be done with the system in environments dissimilar from the Witwatersrand.

The most sensible way of improving the technology and broadening its application would be through research and development programs, similar in concept to the testwork performed in South Africa, involving research organizations and instrumentation system designers and manufacturers. Accordingly joint programs could be set up to develop and refine the use of in-situ analysis for gold in areas where the metal has been economically important. An obvious choice would be Alaska where gold occurs in a variety of environments and associations and where the exploration potential for the discovery of new hard-rock and possibly placer districts is still good.

The system is also being developed to define in-situ concentrations of other commodities such as precious and base metals. EG and G Ortec are involved in the development of a probe for determining uranium concentrations in Witwatersrand ores where the metal occurs as a by-product or co-product of gold in many ore-bodies.

The potential for in-situ analytical systems is enormous in all phases of mining endeavor from initial reconnaissance investigations to the production stage.

Costs

The cost of a full instrumentation system comprising one of each of the four components: hand-held probe, electronic probe, control module and liquid nitrogen supply would depend strongly upon marketability and the number of systems the market can absorb. On a limited (small) output the system could market for approximately $50,000. No dollar figure is expressed for the cost of a borehole probe configuration for the instrument.

Cost effectiveness in the case of a system which has unique potential in allowing on-site grade determinations or the confirmation of the presence of gold in a prospecting environment without the lengthy lag-times experienced in getting results back from a laboratory is not readily expressed in dollar terms. The advantages in terms of tactical considerations afforded by reliable on-the-spot information have enormous appeal and importance.

Unit cost per sample or determination would in the long-run depend upon utilisation. The most effective way of using a system such as that described in this report would probably be on a contract hire basis in which both the system and an experienced operator are charged out on a time-fee basis.

ACKNOWLEDGEMENTS

The writer wishes to acknowledge the cooperation of Dr. P.J.D. Lloyd of the South African Chamber of Mines Research Organization for making available details of the development and test work undertaken on the Witwatersrand with the portable gold analyser. Information provided by Mr. R.F. Hill of EG and G Ortec of Oakridge, Tennessee is also acknowledged.

Fairbanks, Alaska
January, 1980

APPENDIX 1

This report does not describe original research and development in which the writer was involved in any way whatsoever in connection with the design, manufacture and testing of portable gold analysis systems. The report is a synthesis of information relating to an extensively tested gold analyser which with further development and refinement could have very broad application. The report indicates the direction and manner in which research and development should proceed in order to broaden the usefulness of the technology.

APPENDIX 2

The method of recording gold values in this report follows standard metric system practice. Assays are quoted in grams per tonne (g/t). The expression centimeter grams per tonne (cm g/t) is obtained by multiplying the assay value in grams per tonne (g/t) by the measured true width of the sample in centimeters normal to the bedding or edge of the mineralized body.

References and Information Sources

Davis, T.A., Lloyd, P.J.D., Roberts, D.A. and Rolle, R., Report on a portable analyser for measuring gold values in slopes. Chamber of Mines of South Africa, Research Report No. 16/79, March, 1979.

Garber, W. and Hill, R.F., Hand-held high resolution gamma-ray spectrometer, 1977. Text supplied by EG and G Ortec, Incorporated.

Gedcke, D.A., Rolle, R. and Lloyd, P.J.D., A portable gold analyser for in-situ ore analysis. Paper delivered to 26th Annual Conference on Applications of x-Ray Analysis, 1977.

Hill, R.F. and Garber, W., Portable x-ray analyser for in-situ gold qualification. Paper delivered to 23rd Nuclear Science Symposium, 1977.

Roberts, D.A. and Lloyd, P.J.D., Report on underground testing of the first prototype of an instrument for determining gold values in-situ in the reef. Chamber of Mines of South Africa. Research Report No. 38/77, September, 1977.

Rolle, R., Roberts, D.A. and Lloyd, P.J.D., Development of a gamma-ray fluorescence detector for measuring gold values - preliminary underground tests. Chamber of Mines of South Africa, Research Report No. 26/74, May, 1974.

Correspondence between this writer and the following:

Dr. P.J.D. Lloyd - South African Chamber of Mines Research Organization.

Robert F. Hill - EG and G Ortec

Dr. H.O. Seigel - President, Scintrex, Ltd.

J. Baicker, L. Goldman, G. Schnerr, H.B. Soloway, R. Macy and J.T. Wallmark.

A. Borehole Probe for In-Situ Neutron Activation Analysis: Phase 1 Report - OFR 65-79, March, 1978.